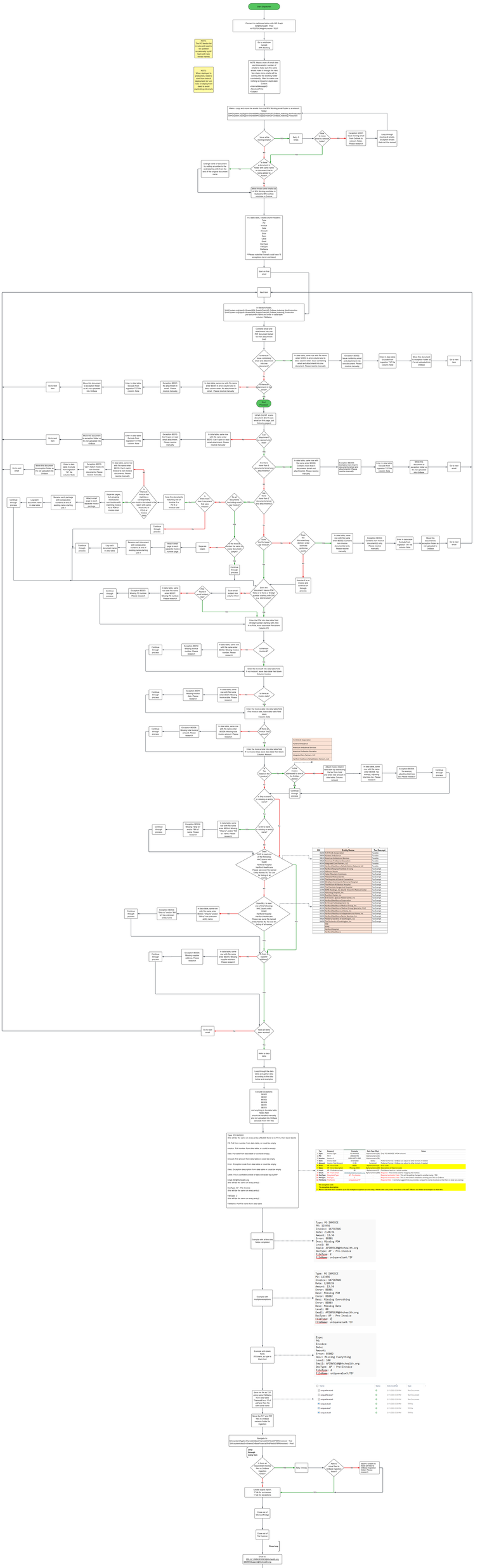
Start Inspection
Connect to mailbox below with MS Graph
orl@mcfcouncil.nhs.net
APTOCFCB@mcfcouncil.nhs.net
Go to sharepoint
Folder
BPA Working
NOTE: Make a copy of email date and times and/or number of attachments in case of errors and/or need it through the rest flow steps since emails will be moved and processed consistently. Want to make sure we have the original unaltered copy.
Subject
• Received/Time
• Subject
Make a copy and move the emails from the BPA Working email folder to a network folder
\\NHSCustom.org\Apps\InformationBPA_Exports\Transit\Jitbox_Indexing_Work\Production
\\NHSCustom.org\Apps\InformationBPA_Exports\Transit\Jitbox_Indexing_Production
NOTE: Only process emails that are in the BPA Working folder
NOTE: When deployed to production, remove the apart from date of receipt filter and make an adjustment to deployed flow to process everything not in error
Issue while moving emails?
Retry 3 times
Is it now in the BPA Working folder?
Exception SE001: Issue moving email from BPA Working to network folder. Please research
Log through moving all emails that did not make it to the network
Is there a file with the same name already in the folder?
Change name of document to include current date and time and ending with 3 or the end of the original documents name
Move those same emails can be in the BPA Working folder Central & BPA Archive subfolder in Outlook
In a data table, create column headers
Type
Sender
Invoice
Date
Amount
Error
Desc
Level
Email
FileType
FileLocation
Error
**Please note that could have 15 exceptions (error and desc)
Start on first email
Next item
In Network folder
\\NHSCustom.org\Apps\InformationBPA_Exports\Transit\Jitbox_Indexing_SortProduction
\\NHSCustom.org\Apps\InformationBPA_Exports\Transit\Jitbox_Indexing_Production
and Move to Jitbox Indexing Production folder
column Fieldnames
Combine email and attachment into one document (email first then attachment 2nd)
Is there a email combining multiple documents into one document?
In data table, same row with the same email SE002 A error column and in error detail: Multiple documents in one document. Please resolve manually.
Exception SE002: Issue combining email and attachment into one document. Please resolve manually.
Enter in data table: Include from Type, Sender, Subject, Date, Error, Desc
Move this document to exception folder in Outlook
Go to next item
Is there a attachment?
Go to next item
Move this document to exception folder in Outlook
Enter in data table: Include from Type, Sender, Subject, Date, Error, Desc
Exception SE003: Can't open or read attachment. Please resolve manually
In data table, same row with the same email: Unable to open attachment. Please resolve manually
Go to next item
Move this document to exception folder in Outlook
Enter in data table: Include from Type, Sender, Subject, Date, Error, Desc
Exception SE003: Can't open or read attachment. Please resolve manually
In data table, same row with the same email: Unable to open attachment. Please resolve manually
Is there more than 5 images (email and attachment)?
In data table, same row with the same email SE004: Too many images in email and attachments. Please resolve manually
Exception SE004: Contains more than 5 images in email and attachments. Please resolve manually
Enter in data table: Include from Type, Sender, Subject, Date, Error, Desc
Move this document to exception folder in Outlook
Go to next email
Go to next item
Move this document to exception folder in Outlook
Enter in data table: Include from Type, Sender, Subject, Date, Error, Desc
Exception SE005: Contains more than 5 documents. Please resolve manually
In data table, same row with the same email SE005: Too many documents. Please resolve manually
Go to next email
Move this document to exception folder in Outlook
Enter in data table: Include from Type, Sender, Subject, Date, Error, Desc
Exception SE006: Contains more than 5 documents only. Please resolve manually
In data table, same row with the same email SE006: Too many documents. Please resolve manually
Go to next item
Is there a PDF?
Is there more than 5 documents (email and attachments)?
Is there a PDF?
Is there more than 5 documents (email and attachments)?
Continue through process
Scan the document matching one of the keywords in PDF or invoice text
Is there more than 5 documents (email and attachments)?
Continue through process
Continue through process
Log each document into data table
Rename each exchange with consecutive numbers and add existing name starting with 1
Move email page to each separate invoice exchange
Separate pages into grouping invoice and non invoice documents matching invoice & or PO# or invoice text
Rename each document with consecutive numbers and add existing name starting with 1
Attach email page to each separate invoice
Separate pages
Is the invoice in a PDF document?
Continue through process
Is there only invoice?
Does the document contain only invoice?
In data table, same row with the same email SE007: Contains non invoice documents. Please resolve manually
Exception SE007: Contains non invoice documentation only. Please resolve manually
Enter in data table: Include from Type, Sender, Subject, Date, Error, Desc
Move this document to exception folder in Outlook
Go to next email
Assume it is an invoice and continue on through process
Continue through process
Exception SE001: Missing PO number. Please research
In data table, same row with the same email SE001: Missing PO number. Please research
Check if there is a PO number
Scan email subject line only for PO #
Scan the document for a PO number (PO, PO#, or there is 10 digit number starting with 2 i.e. 2000124567)
Enter the PO# into data table field PO (9 digit number starting with 200) or if no PO# in data table field Extra Fields 1 (Jobs #)
Continue through process
Exception SE002: Missing invoice number. Please research
In data table, same row with the same email SE002: Missing invoice number. Please research
Is there an invoice #?
Enter the Invoice# into data table field Invoice (Custom Data)
Continue through process
Exception SE011: Missing invoice date. Please research
In data table, same row with the same email SE011: Missing invoice date. Please research
Is there an invoice date?
Enter the Invoice date into data table field If no invoice date, leave date table field Invoice Date (Custom Data)
Continue through process
Exception SE008: Missing total invoice amount. Please research
In data table, same row with the same email SE008: Missing total invoice amount. Please research
Is there a total amount?
Enter the Invoice amount into data table field If no invoice amount, leave data table field Invoice Amount (Custom Data)
Is the invoice addressed to one of the following?
Adjust invoice total to exclude the amount for the non-invoice and enter new amount in data table field amount
In data table, same row with the same email SE009: Tax exempt, adjusting total field. Please research
Exception SE009: Tax exempt, adjusting total field. Please research
Continue through process
Is there a date in the invoice?
Is there a date in the invoice?
Continue through process
Exception SE004: Missing Ship or Invoice date. Please research
In data table, same row with the same email SE004: Missing Ship or Invoice date. Please research
Is data in date format?
SAP is need only Entity Name, Tax Exempt and Jobs #
Verify Hospital Name Entity Name Please see excel file Hospital Entity Names for Tax List
Tax Exempt "Y" or "N"
Jobs #
Must ALL in need only Entity Name, Tax Exempt and Jobs #
Verify Hospital Name Entity Name Please see excel file Hospital Entity Names for Tax List
Tax Exempt "Y" or "N"
Jobs #
Continue through process
Exception SE004: Missing Ship or Invoice date. Please research
In data table, same row with the same email SE004: Missing Ship or Invoice date. Please research
Is data in date format?
Continue through process
Exception SE005: Tax exempt "Y" and/or "N" but missing entity name
In data table, same row with the same email SE005: "Entity name" and/or "Tax exempt" missing. Please research
Is Tax exempt "Y" or "N"?
Continue through process
Exception SE005: Tax exempt "Y" and/or "N" but missing entity name
In data table, same row with the same email SE005: "Entity name" and/or "Tax exempt" missing. Please research
Is Tax exempt "Y" or "N"?
Go to next email
Has an invoice been scanned
Refer to ship date
Loop through the data table and gather data according to the data mapping provided
Exclude Exceptions
SE001
SE002
SE003
SE004
SE005
SE006
SE007
SE008
SE009
and exceptions in the data table. Notes field
Move those emails, and not uploaded into Outlook (exclude from TXT file)
Type: PO INVOICE
PO: 123456
Invoice: 147587ABC
Date: 2/28/24
Amount: 13.56
Error: 0000
Desc: Missing PO#
Level: 00
Email: APTOCFCB@mcfcouncil.org
DocType: AP - Pre-Invoice
FileType: 2
FileName: orlopera1w6.TIF
Examples with all the data fields completed
Type: PO INVOICE
PO: 123456
Invoice: 147587ABC
Date: 2/28/24
Amount: 13.56
Error: 0000
Desc: Missing PO#
Level: 00
Email: APTOCFCB@mcfcouncil.org
DocType: AP - Pre-Invoice
FileType: 2
FileName: orlopera1w6.TIF
Exclude with multiple exceptions
Type:
PO:
Invoice:
Date:
Amount:
Error: 0000
Desc: Missing Everything
Level: 100
Email: APTOCFCB@mcfcouncil.org
DocType: AP - Pre-Invoice
FileType: 2
FileName: orlopera1w6.TIF
Example with blank PO (no date, no type in bank list)
Save the file as TXT using same Fieldnames as in Jitbox Indexing. There will be a 1 to 1 relationship between TXT with same name
Move the TXT and PDF files to Outlook network folder for Ingest
Navigate to:
\\NHSCustom.org\Apps\InformationBPA_Exports\Transit\Jitbox_Indexing_Production\Ready\Ready\Ready